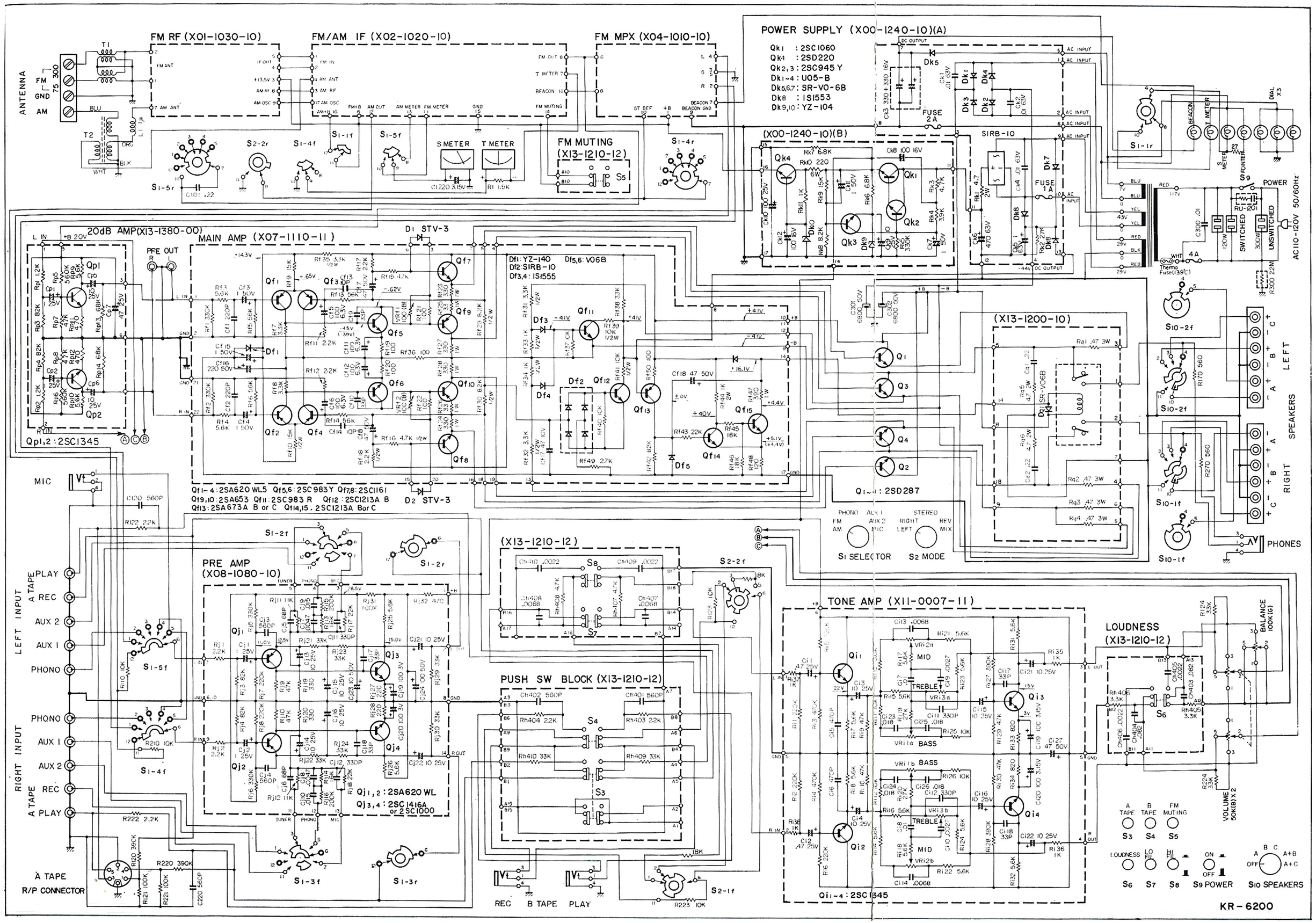
FM RF (X01-1030-10)
FM/AM IF (X02-1020-10)
FM MPX (X04-1010-10)
POWER SUPPLY (X00-1240-10)(A)
Qk1 : 2SC1060
Qk4 : 2SD220
Qk2,3 : 2SC945 Y
Dk1~4 : U05-B
Dk5,6,7 : SR-V0-6B
Dk8 : 1S1553
Dk9,10 : YZ-104
(X00-1240-10)(B)
SIRB-10
ANTENNA
FM
GND
75 300
AM
S METER
T METER
FM MUTING
(X13-1210-12)
20dB AMP(X13-1380-00)
MAIN AMP (X07-1110-11)
PRE OUT
Qp1,2 : 2SC1345
Qf1~4 : 2SA620 WL5 Qf5,6 : 2SC983 Y Qf7,8 : 2SC1161
Qf9,10 : 2SA653 Qf11 : 2SC983 R Qf12 : 2SC1213A B
Qf13 : 2SA673A B or C Qf14,15 : 2SC1213A B or C
Df1 : YZ-140 Df5,6 : V06B
Df2 : SIRB-10
Df3,4 : 1S1555
Q1~4 : 2SD287
(X13-1200-10)
SR-V06B
MIC
PHONO AUX 1 FM AM AUX 2 MIC
S1 SELECTOR
STEREO RIGHT LEFT REV MIX
S2 MODE
PRE AMP (X08-1080-10)
Qj1,2 : 2SA620 WL
Qj3,4 : 2SC1416A or 2SC1000
(X13-1210-12)
PUSH SW BLOCK (X13-1210-12)
TONE AMP (X11-0007-11)
Qi1~4 : 2SC1345
LOUDNESS (X13-1210-12)
BALANCE 100K(G)
VOLUME 50K(B) X 2
LEFT INPUT
A TAPE
PLAY
REC
AUX 2
AUX 1
PHONO
RIGHT INPUT
A TAPE
A PLAY
A TAPE R/P CONNECTOR
REC B TAPE PLAY
LEFT SPEAKERS
RIGHT SPEAKERS
PHONES
AC110-120V 50/60Hz
POWER
SWITCHED
UNSWITCHED
A TAPE B TAPE FM MUTING
S3 S4 S5
LOUDNESS LO FIL HI FIL ON OFF
S6 S7 S8 S9 POWER
S10 SPEAKERS
KR-6200

FM/AM IF (X02-1020-10)

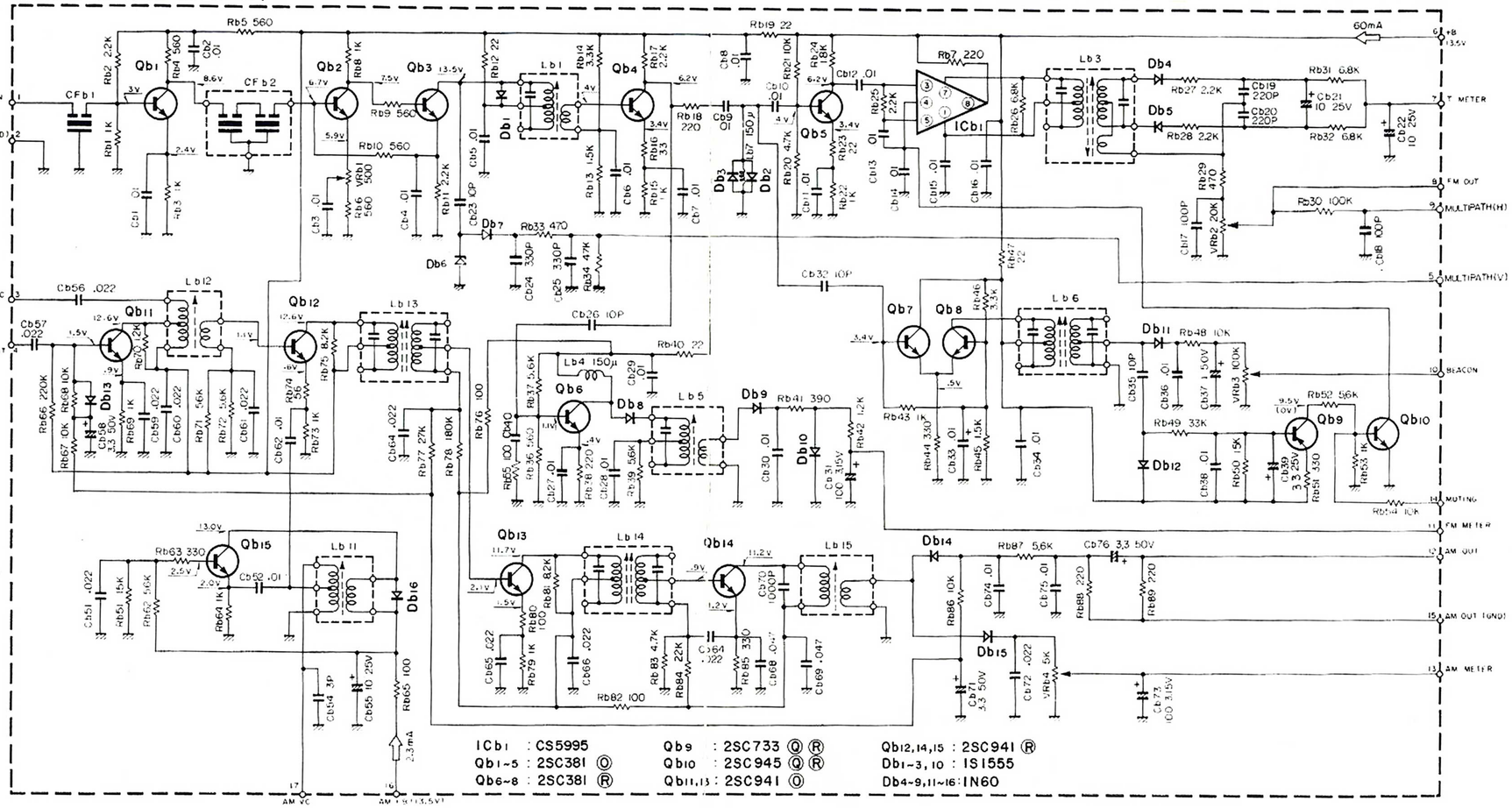

FM RF (X01-1030-10)

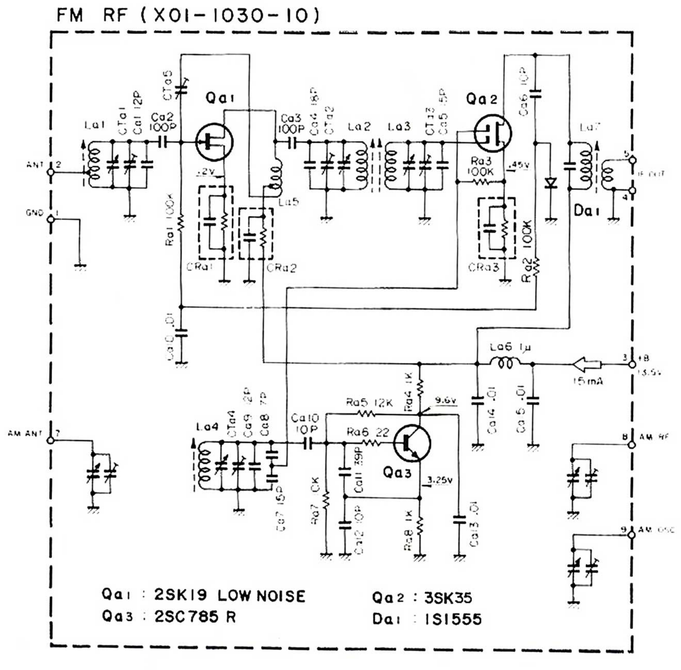

FM MPX (X04-1010-10)

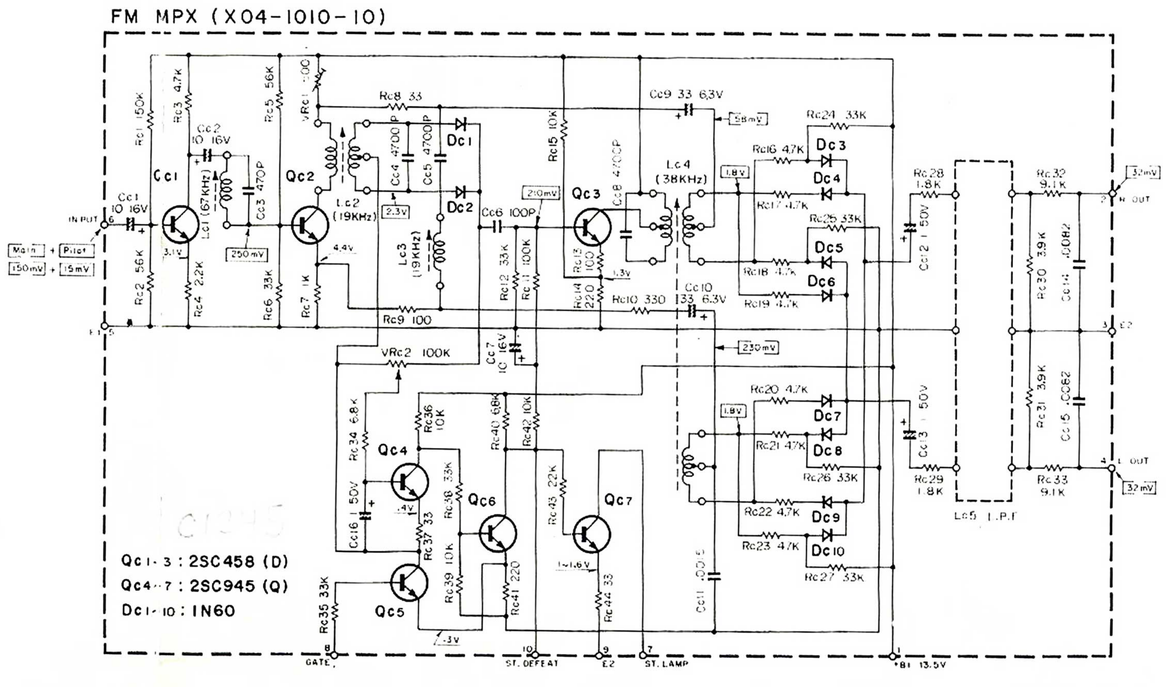

FOR KR-6200(K)

REVISED CIRCUITS

■ For 110-120/220-240V area (1)

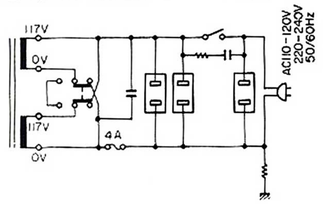

■ For 110-120/220-240V area (2)

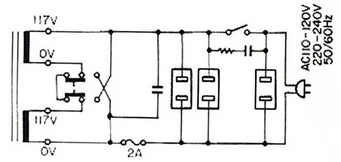

■ For the sets sold in Europe except England.

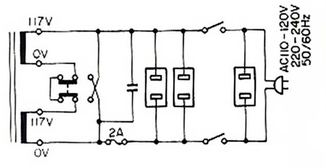

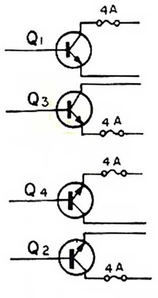

NOTE: **We reserve the right to make modifications in this model in accordance with technical developments.**

KR-6200 SCHEMATICDIA

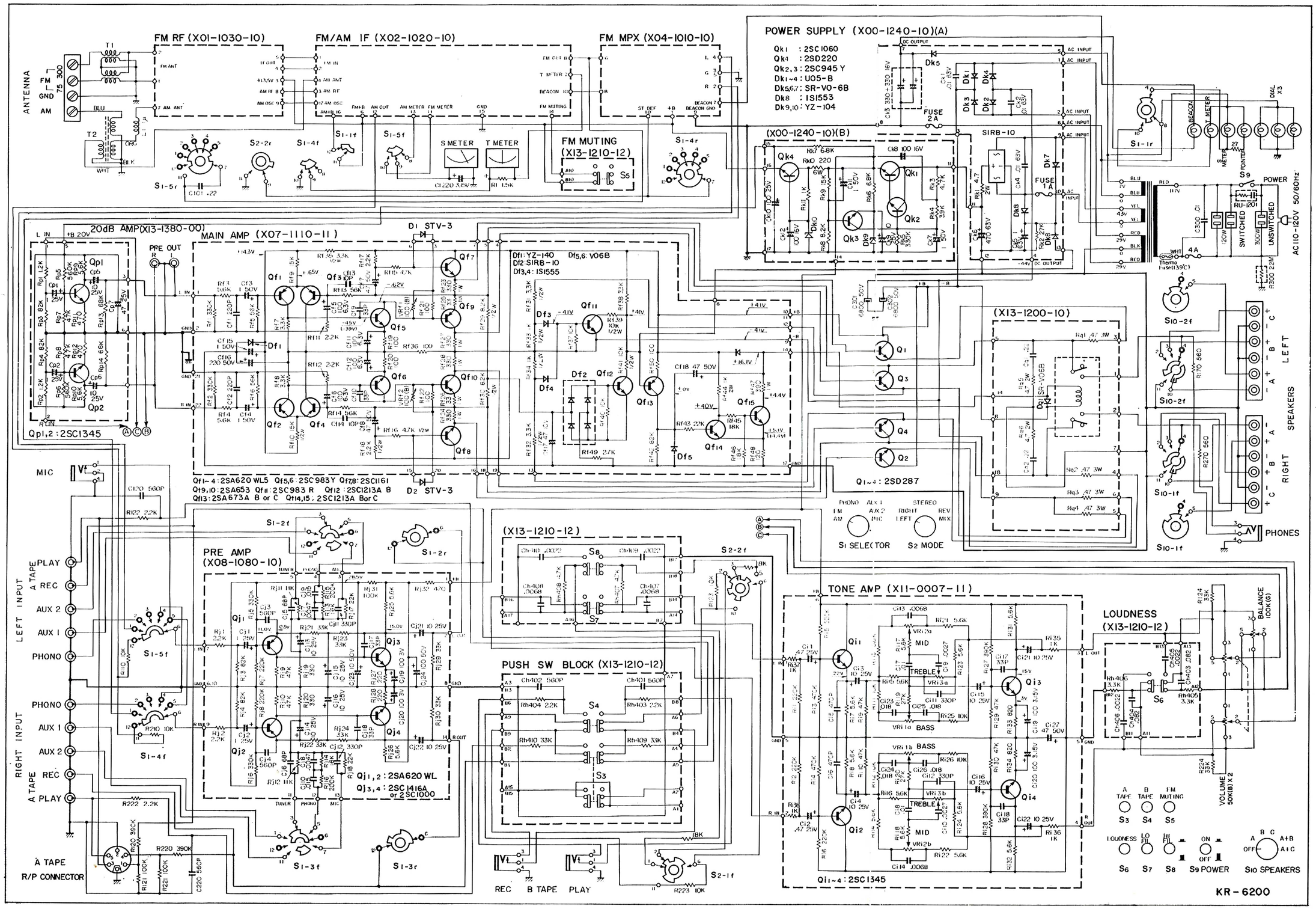

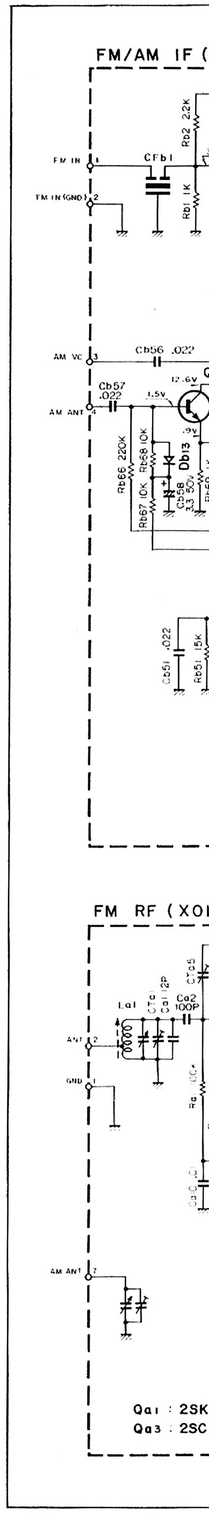

NOTE: We

O SCHEMATICDIAGRAM

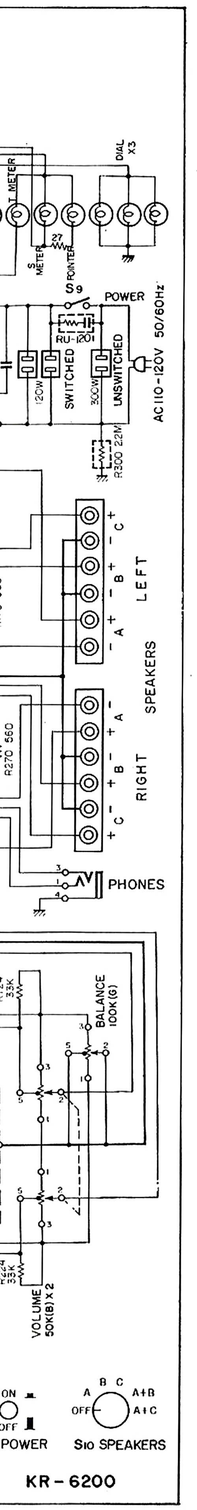

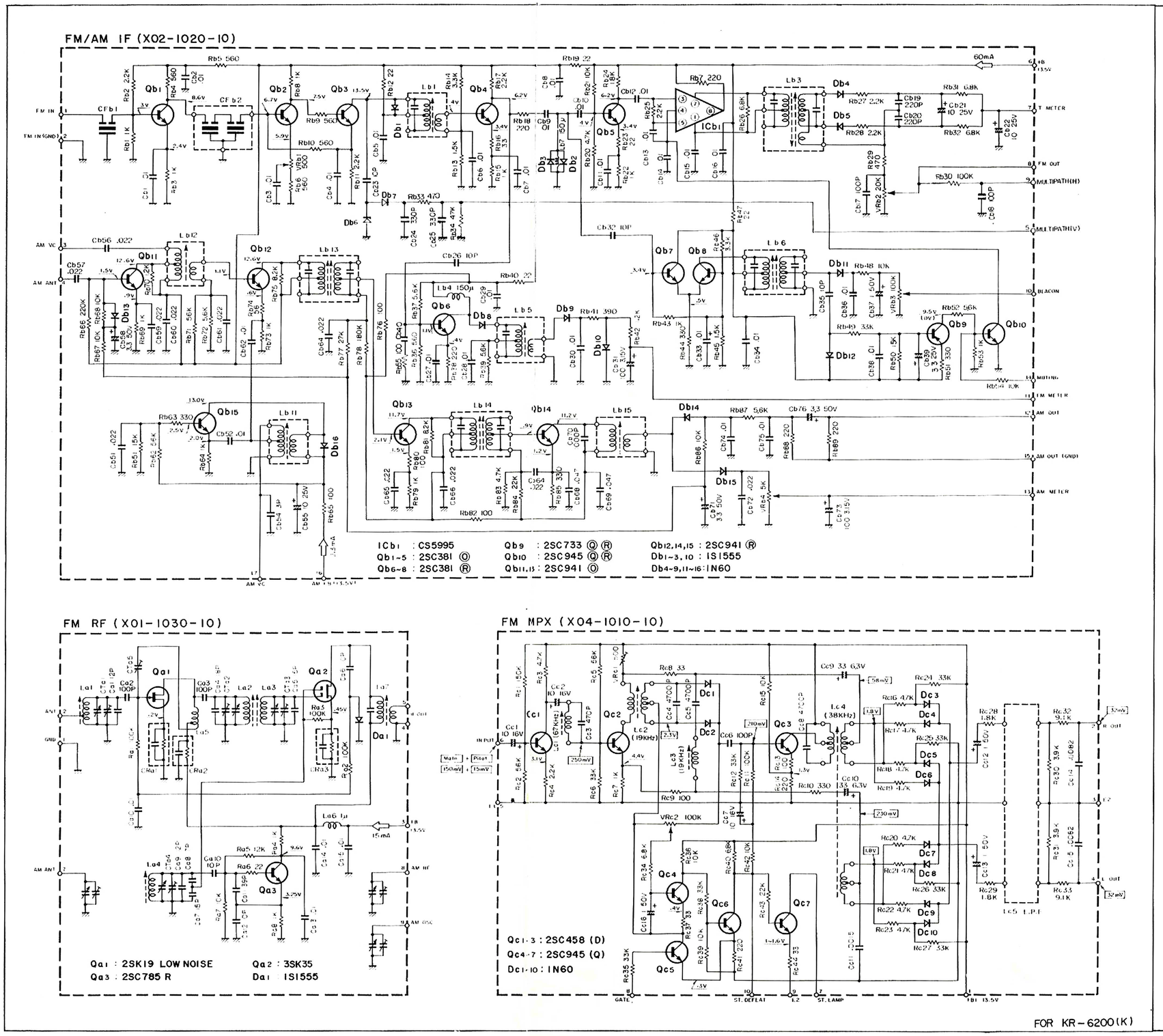

REVISED CIRCUITS

■ For 110-120/220-240V area (1)

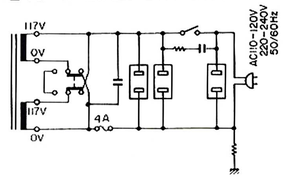

■ For 110-120/220-240V area (2)

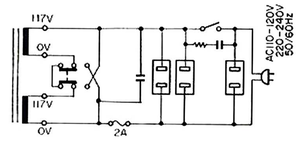

■ For the sets sold in Europe except England.

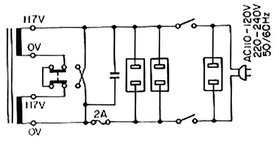

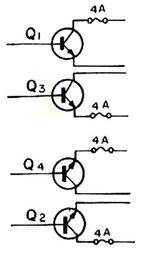

NOTE: **We reserve the right to make modifications in this model in accordance with technical developments.**

© 3389 PRINTED IN JAPAN B52-0133-10 (KPUMW) (R)